BORE GAUGES (WITH DIAL INDICATOR)

VIDEO

ATTENTION: NOT SUITABLE FOR 0.001MM DIAL INDICATORS

- Optional accessory: setting ring (code **6312**), long handle (code **7351**), bore gauge setter

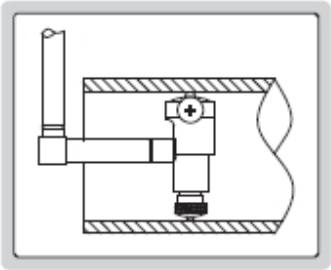

2827-160A

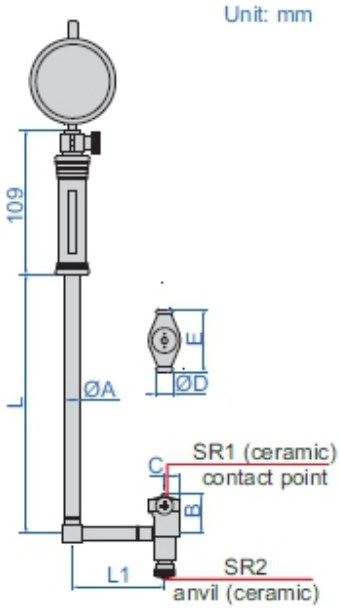

2308-10FA | **2108-10F** | **2137-10F**

(mm)

Range	ØA	B	C	ØD	E	L	L1
35-60mm	12.8	22	9	13	27	141	75
50-160mm	12.8	28.5	9.2	13	35	141	76.2
160-250mm	14.5	62.0	12.7	15	74.5	391	100
250-450mm	14.5	91.5	15.0	15	101.5	391	100

with digital indicator

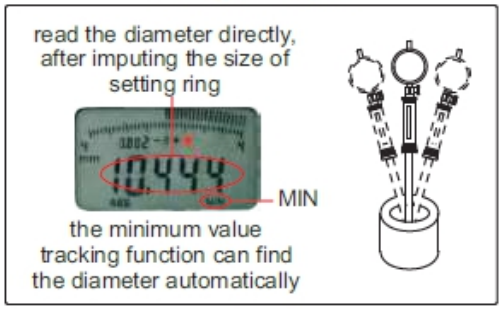

with waterproof digital indicator

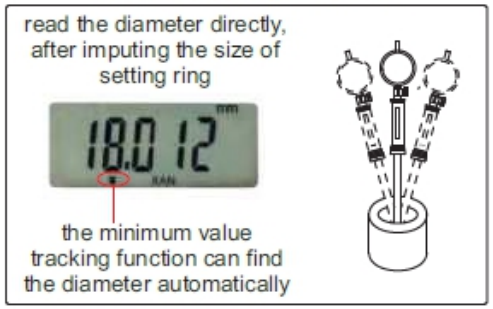

With dial indicator

Code	Range	Indicator	Accuracy	Repeatability
2827-60A	35-60mm	dial indicator, code **2308-10FA**, range 10mm, graduation 0.01mm	±0.018mm	0.003mm
2827-160A	50-160mm		±0.018mm	0.003mm
2827-250A	160-250mm		±0.018mm	0.003mm
2827-450A	250-450mm		±0.018mm	0.003mm

With digital indicator (optional data output cable: code 7315-51B receiver is needed page 7, 7214-51B page 12, 7302-40M page 21)

Code	Range	Indicator	Accuracy	Repeatability
2127-60	35-60mm	digial indicator, code **2108-10F**, range 12.7mm/0.5", resolution 0.002mm/0.0001" (can switch to: 0.01mm/0.0005")	±0.018mm	0.003mm
2127-160	50-160mm		±0.018mm	0.003mm
2127-250	160-250mm		±0.018mm	0.003mm
2127-450	250-450mm		±0.018mm	0.003mm

With waterproof digital indicator (optional data output cable: code 7315-51B receiver is needed page 7, 7214-51B page 12, 7302-40M page 21)

Code	Range	Indicator	Accuracy	Repeatability
2127-60WP	35-60mm	waterproof digital indicator, code **2137-10F**, range 12.7mm/0.5", dust/waterproof IP54, resolution 0.002mm/0.0001" (can switch to 0.01mm/0.0005")	±0.018mm	0.003mm
2127-160WP	50-160mm		±0.018mm	0.003mm
2127-250WP	160-250mm		±0.018mm	0.003mm
2127-450WP	250-450mm		±0.018mm	0.003mm