THICKNESS GAUGES

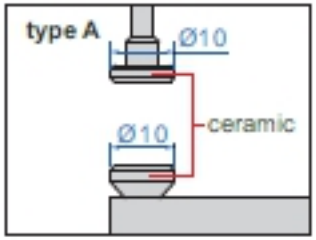

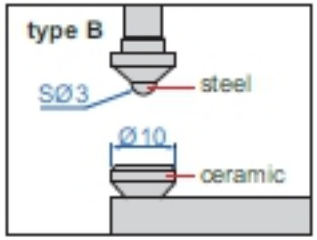

Code	Range	Graduation	Accuracy	Type
2366-30	0-30mm	0.01mm	±0.035mm	A
2366-30B	0-30mm	0.01mm	±0.035mm	B

2366-30
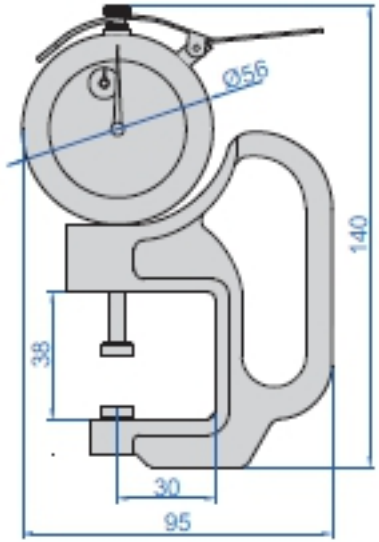
Unit: mm